DAIKO 大光電機株式会社

521-01E

[illegible]

## [illegible]

[illegible] ⚠警告 [illegible] ⚠注意 [illegible]

⚠警告 [illegible]

⚠注意 [illegible]

⚠警告 ⚠注意 [illegible]

⚠ 警 告

**火災のおそれあり**
器具を布や紙等可燃物で覆ったり、火気近傍への取付禁止。

**落下して怪我のおそれあり**
カバーやグローブの取付は指定通り確実に行うこと。又、取扱は必ず丁寧に行うこと。

**落下して怪我（感電・火災）のおそれあり**
指定方向以外での取付禁止。

## [illegible]

⚠ [illegible]

[illegible]

[illegible] 50Hz [illegible] 60Hz [illegible]

[illegible] ±6 [illegible]

[illegible]

⚠ [illegible]

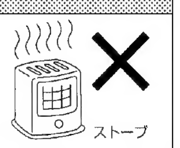


[illegible]

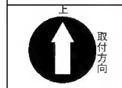


[illegible] 20mm [illegible]

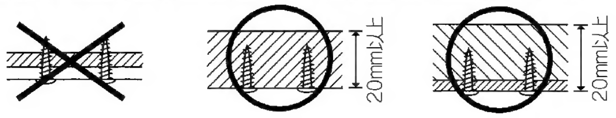


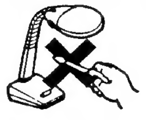

[illegible]

⚠ [illegible]

⚠ [illegible]

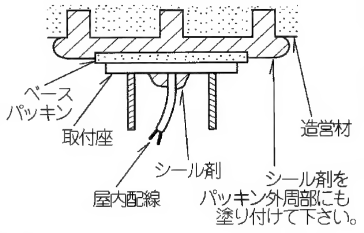


[illegible] 8 [illegible] 10 [illegible] 6 [illegible] 1 [illegible] 3 [illegible] 5 [illegible] 1 [illegible] ※ [illegible] 30℃ [illegible] 1 [illegible] 10 [illegible] 3000 [illegible] JIS C8105-1 [illegible]

⚠ [illegible]

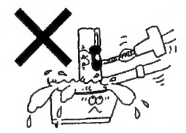

## [illegible]

● [illegible]

1. [illegible] 20± 15℃ [illegible]
2. [illegible]
3. [illegible]
4. [illegible]

## [illegible]

● [illegible]
● [illegible] 20±15℃ [illegible] 65± 20 [illegible]

## [illegible]

[illegible]

## [illegible]

[illegible]

| [illegible] | [illegible] | [illegible] |
|---|---|---|
| [illegible] | TEL 011 561-8067 | TEL 011 561-8152 |
| [illegible] | TEL 022 284-5611 | TEL 022 284-5611 |
| [illegible] | TEL 03 5600-7806 | TEL 03 5600-3445 |
| [illegible] | TEL 048 652-1015 | TEL 048 654-0261 |
| [illegible] | TEL 045 941-6310 | TEL 045 941-6331 |
| [illegible] | TEL 052 821-6276 | TEL 052 821-7105 |
| [illegible] | TEL 072 965-3427 | TEL 06 6731-1286 |
| [illegible] | TEL 082 247-6711 | TEL 082 246-2162 |
| [illegible] | TEL 092 531-3164 | TEL 092 531-4744 |

※ [illegible] 19 [illegible] 4 [illegible] 1 [illegible]

[illegible] 541-0043 [illegible] 3-2-7 [illegible]
TEL 06 6222-6240 [illegible]

[illegible]

# DWP-54176・54177 54334・54335

[illegible]

521-01-54176A

## [illegible]

- [illegible]
- [illegible] ●[illegible] 2 [illegible]
- [illegible]
- [illegible]
- [illegible] A [illegible] 10W [illegible]
- [illegible]
- [illegible] 1 [illegible]

| | |
|---|---|
| [illegible] | DWP-54176・54177・54334・54335 |
| [illegible] | 100V |
| [illegible] | 35W |
| [illegible] | [illegible] PS [illegible] 110V 40W×1 E-17 |
| [illegible] | [illegible] 1.4Kg |
| [illegible] | [illegible] |

## [illegible]

⚠ [illegible]
■[illegible]

⚠ [illegible]
■[illegible] 1 [illegible]

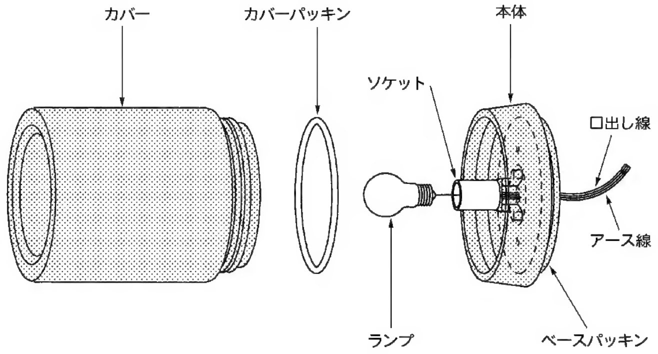


※[illegible]

## [illegible]

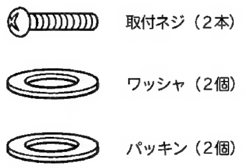


## [illegible]

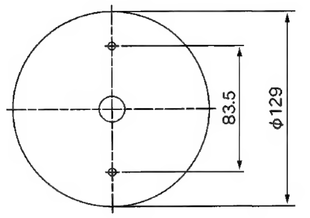


## [illegible]

[illegible]
- [illegible]

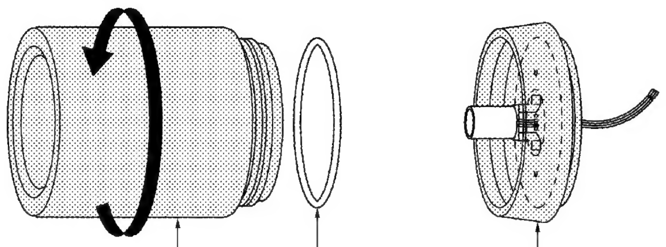


[illegible]
- [illegible]
- [illegible]
- [illegible] D [illegible]

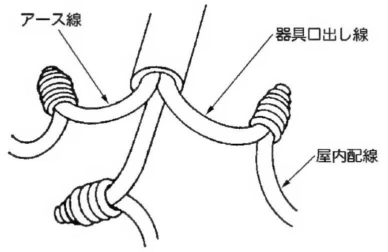


[illegible] 1 [illegible]
- [illegible] 2 [illegible] 2 [illegible] 2 [illegible] 1 [illegible]
- [illegible]

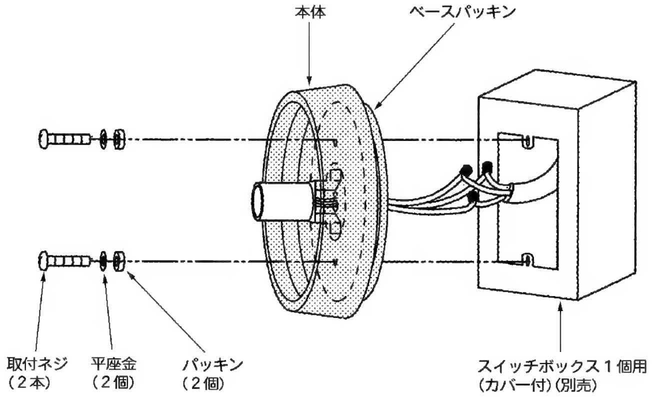


[illegible]
- [illegible]
- [illegible]

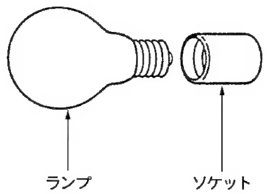


[illegible]
- [illegible]
- [illegible]

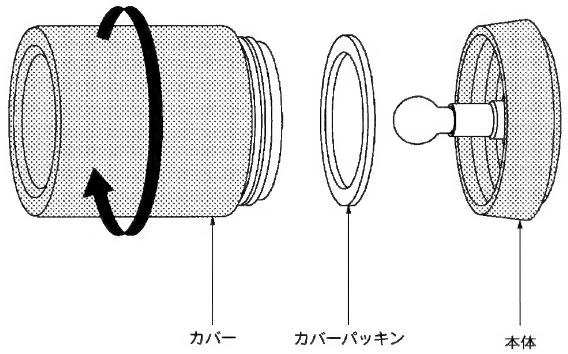


- DWP-54177・54335 [illegible]

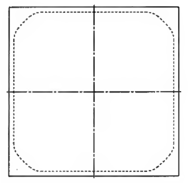

[illegible]
- [illegible]

[illegible]
- [illegible]
- [illegible]
- [illegible]

## [illegible]

- [illegible]

## [illegible]

- [illegible]
- [illegible]

## [illegible]

1. 6 [illegible] 1 [illegible]

(1) [illegible]

- [illegible]
- [illegible]
- [illegible]
- [illegible]
- [illegible]
- [illegible]

※[illegible]

(2) [illegible]

[illegible]

| [illegible] | [illegible] |
|---|---|
| [illegible] | [illegible] 1～2 [illegible] |
| [illegible] | 30℃～40℃ [illegible] |
| [illegible] | [illegible] |
| [illegible] | [illegible] |

※[illegible]

2. [illegible]

[illegible]

[illegible] 1 [illegible] 10 [illegible] 8～10 [illegible]

[illegible]